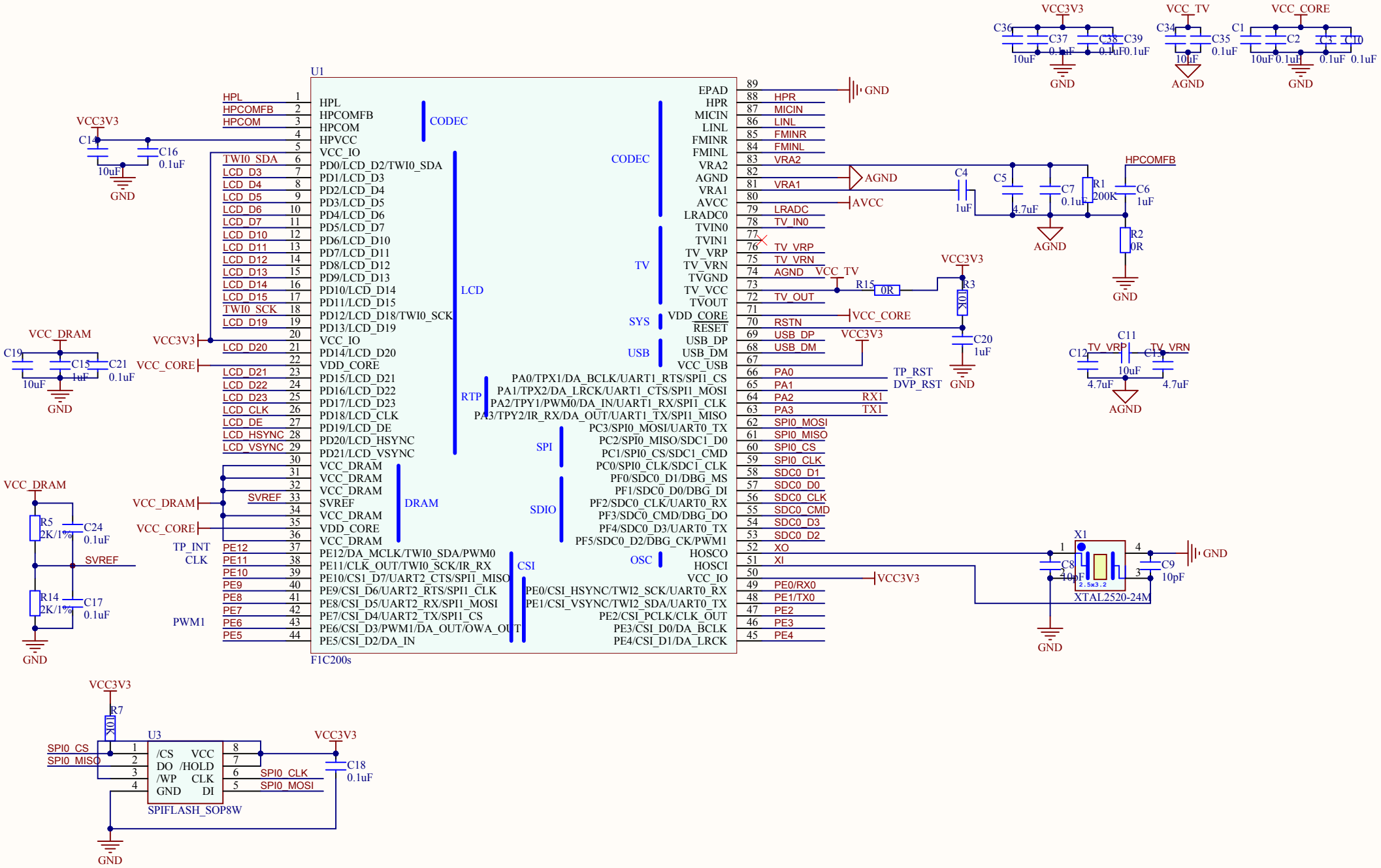
U1
F1C200s
CODEC
LCD
DRAM
RTP
SPI
SDIO
CSI
TV
SYS
USB
OSC
HPL
HPCOMFB
HPCOM
TWI0_SDA
LCD_D3
LCD_D4
LCD_D5
LCD_D6
LCD_D7
LCD_D10
LCD_D11
LCD_D12
LCD_D13
LCD_D14
LCD_D15
TWI0_SCK
LCD_D19
LCD_D20
LCD_D21
LCD_D22
LCD_D23
LCD_CLK
LCD_DE
LCD_HSYNC
LCD_VSYNC
SVREF
TP_INT
CLK
PWM1
HPR
MICIN
LINL
FMINR
FMINL
VRA2
VRA1
LRADC
TV_IN0
TV_VRP
TV_VRN
TV_OUT
RSTN
USB_DP
USB_DM
PA0
PA1
PA2
PA3
RX1
TX1
SPI0_MOSI
SPI0_MISO
SPI0_CS
SPI0_CLK
SDC0_D1
SDC0_D0
SDC0_CLK
SDC0_CMD
SDC0_D3
SDC0_D2
XO
XI
PE0/RX0
PE1/TX0
PE2
PE3
PE4
VCC3V3
VCC_TV
VCC_CORE
VCC_DRAM
AGND
GND
TP_RST
DVP_RST
X1
XTAL2520-24M
U3
SPIFLASH_SOP8W
/CS
DO
/WP
GND
VCC
/HOLD
CLK
DI