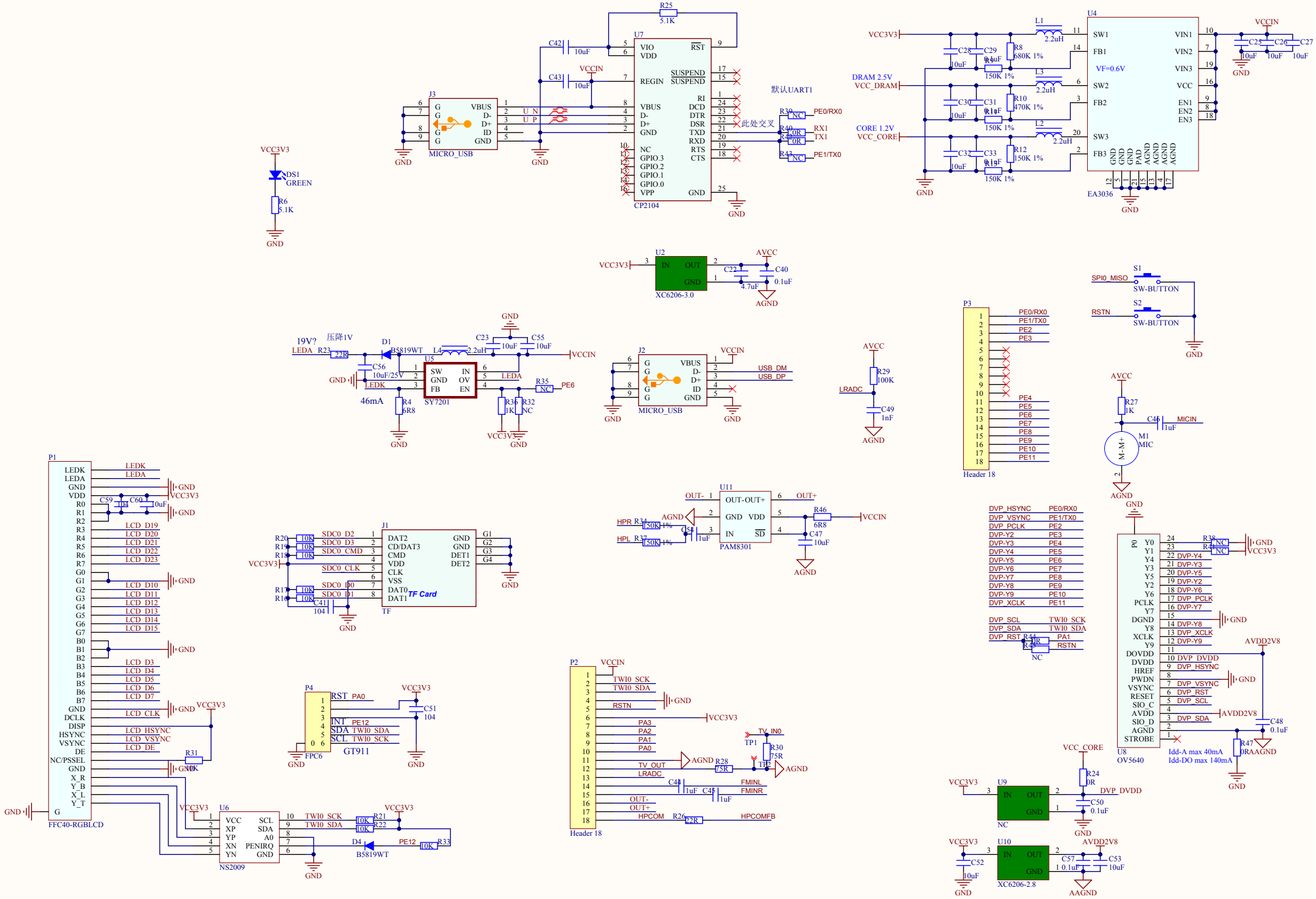

U7
CP2104
VIO
VDD
REGIN
VBUS
D-
D+
GND
NC
GPIO.3
GPIO.2
GPIO.1
GPIO.0
VPP
RST
SUSPEND
RI
DCD
DTR
DSR
TXD
RXD
RTS
CTS
J3
MICRO_USB
VBUS
D-
D+
ID
GND
U_N
U_P
R25
5.1K
C42
10uF
C43
10uF
VCCIN
默认UART1
此处交叉
R39
R40
R43
PE0/RX0
RX1
TX1
PE1/TX0
U4
EA3036
SW1
FB1
SW2
FB2
SW3
FB3
VIN1
VIN2
VIN3
VCC
EN1
EN2
EN3
VF=0.6V
VCC3V3
DRAM 2.5V
VCC_DRAM
CORE 1.2V
VCC_CORE
L1
L2
L3
2.2uH
R8
680K 1%
R9
150K 1%
R10
470K 1%
R11
150K 1%
R12
150K 1%
C28
C29
C30
C31
C32
C33
C25
C26
C27
10uF
GND
DS1
GREEN
R6
5.1K
U2
XC6206-3.0
IN
OUT
GND
C22
4.7uF
C40
0.1uF
AVCC
AGND
19V?
压降1V
LEDA
R23
22R
D1
B5819WT
L4
2.2uH
C23
10uF
C55
10uF
U5
SY7201
SW
GND
FB
IN
OV
EN
C56
10uF/25V
LEDK
46mA
R4
6R8
R35
NC
PE6
R36
1K
R32
NC
J2
MICRO_USB
USB_DM
USB_DP
R29
100K
LRADC
C49
1nF
P3
Header 18
PE0/RX0
PE1/TX0
PE2
PE3
PE4
PE5
PE6
PE7
PE8
PE9
PE10
PE11
S1
SPI0_MISO
SW-BUTTON
S2
RSTN
R27
1K
C46
1uF
MICIN
M1
MIC
M-M+
P1
FFC40-RGBLCD
LEDK
LEDA
GND
VDD
R0
R1
R2
R3
R4
R5
R6
R7
G0
G1
G2
G3
G4
G5
G6
G7
B0
B1
B2
B3
B4
B5
B6
B7
DCLK
DISP
HSYNC
VSYNC
DE
NC/PSSEL
X_R
Y_B
X_L
Y_T
G
C59
C60
10uF
LCD_D19
LCD_D20
LCD_D21
LCD_D22
LCD_D23
LCD_D10
LCD_D11
LCD_D12
LCD_D13
LCD_D14
LCD_D15
LCD_D3
LCD_D4
LCD_D5
LCD_D6
LCD_D7
LCD_CLK
LCD_HSYNC
LCD_VSYNC
LCD_DE
R31
10K
U6
NS2009
VCC
XP
YP
XN
YN
SCL
SDA
A0
PENIRQ
GND
TWI0_SCK
TWI0_SDA
R21
R22
D4
B5819WT
PE12
R33
J1
TF
DAT2
CD/DAT3
CMD
VDD
CLK
VSS
DAT0
DAT1
GND
DET1
DET2
TF Card
SDC0_D2
SDC0_D3
SDC0_CMD
SDC0_CLK
SDC0_D0
SDC0_D1
C41
104
U11
PAM8301
OUT-
OUT+
GND
VDD
IN
SD
HPR
HPL
R34
R37
150K 1%
C51
1uF
R46
6R8
C47
10uF
P4
FPC6
GT911
RST
PA0
INT
PE12
SDA
TWI0_SDA
SCL
TWI0_SCK
C51
104
P2
Header 18
TWI0_SCK
TWI0_SDA
RSTN
PA3
PA2
PA1
PA0
TV_OUT
LRADC
OUT-
OUT+
HPCOM
TV_IN0
TP1
TP2
R30
75R
R28
75R
C44
1uF
C45
1uF
FMINL
FMINR
R26
22R
HPCOMFB
DVP_HSYNC
DVP_VSYNC
DVP_PCLK
DVP-Y2
DVP-Y3
DVP-Y4
DVP-Y5
DVP-Y6
DVP-Y7
DVP-Y8
DVP-Y9
DVP_XCLK
DVP_SCL
DVP_SDA
DVP_RST
PE0/RX0
PE1/TX0
PE2
PE3
PE4
PE5
PE6
PE7
PE8
PE9
PE10
PE11
TWI0_SCK
TWI0_SDA
PA1
RSTN
NC
U8
OV5640
P0
Y0
Y1
Y4
Y3
Y5
Y2
Y6
PCLK
Y7
DGND
Y8
XCLK
Y9
DOVDD
DVDD
HREF
PWDN
VSYNC
RESET
SIO_C
AVDD
SIO_D
AGND
STROBE
DVP_DVDD
DVP_HSYNC
DVP_VSYNC
DVP_RST
DVP_SCL
DVP_SDA
AVDD2V8
C48
0.1uF
R47
0R
AAGND
Idd-A max 40mA
Idd-DO max 140mA
U9
NC
VCC_CORE
R24
0R
DVP_DVDD
C50
0.1uF
U10
XC6206-2.8
C52
10uF
C57
0.1uF
C53
10uF